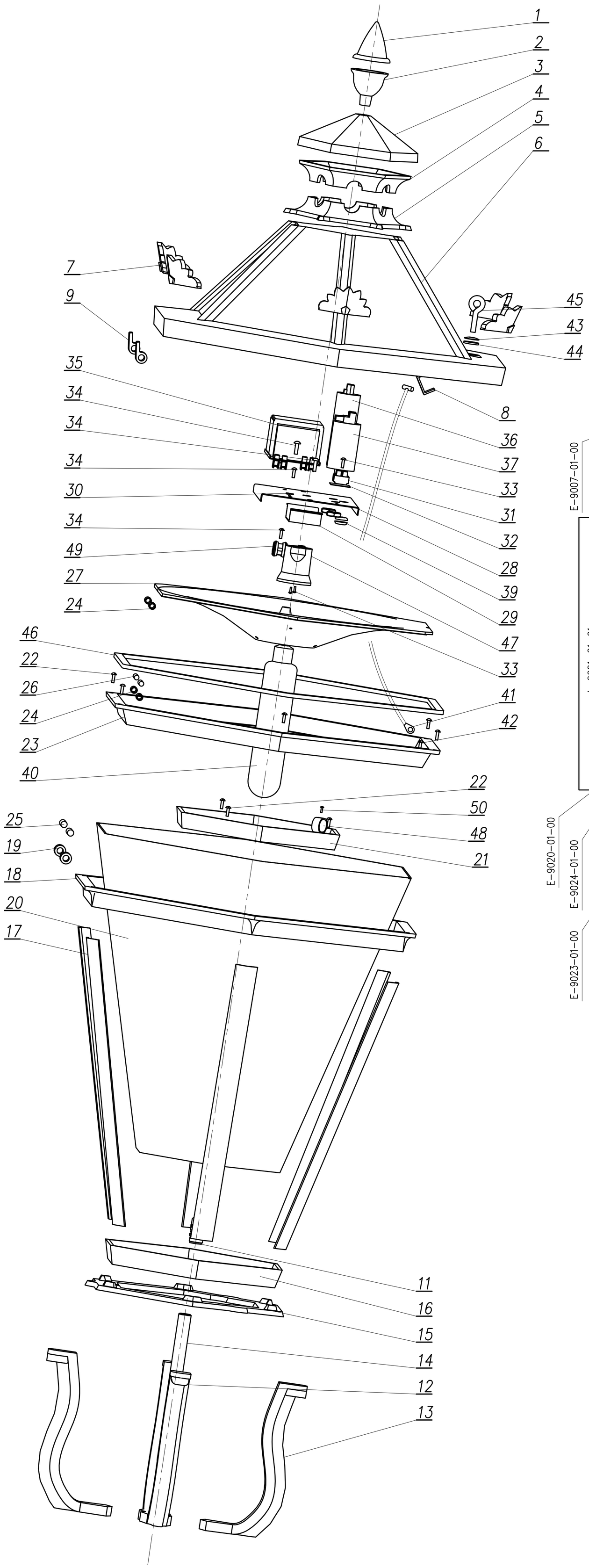

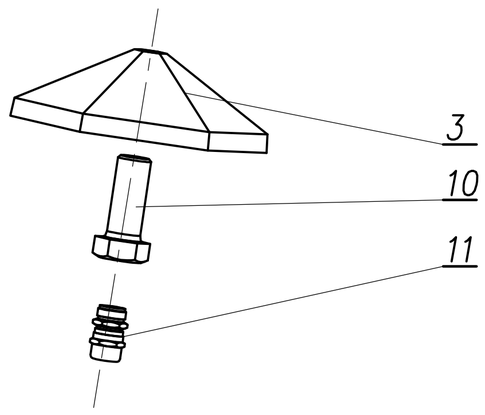

	50							
	49							
	48							
	47							
	46							
	45							
E-9007-01-00	44							
	43							
	42							
	41							
	40							
L-0001-01-01	39							
	38							
	37							
	36							
	35							
	34							
	33							
	32							
	31							
	30							
E-9020-01-00	29							
	28							
E-9024-01-00	27							
	26							
	25							
E-9023-01-00	24							
	23							
	22							
L-0002-01-03	21							
	20							
	19							
	18							
	17							
	16							
	15							
	14							
	13							
	12							
	11							
L-0002-01-02	10							
	9							
	8							
	7							
	6							
	5							
	4							
	3							
	2							
	1							
	nr.	item		drawing	material	quant.	sing. weight	total weight	notes

DIMENSION TOLERANCE: +/- 1%

	name	date	sign
design:			
drawing:			
accept:			

company name

art metal

FIRMA PRODUKCYJNO-HANDLOWA
"ART-METAL" Sp.J.
Łapino 34 83-331 Przyjaźń

drawing name

scale	size	drawing number	nr. of sch.
1:2	420x594	L-0001-02-00	1/1